SIRS-206-201G2M/C-S \ SIRM-206-191U3M/C

SIRIUS Series 2MP CMOS USB3.0 Camera



The SIRIUS USB3.0 series consists of split industrial digital cameras built on GMSL2 technology. The imaging acquisition unit and data transmission output unit are connected via a coaxial cable. The front-end imaging unit features a compact form factor for easy integration into confined spaces, making it well suited for embedded system applications. This industrial camera offers high reliability, excellent cost performance and low power consumption.

Applications

Suitable for applications in semiconductor packaging and testing, lithium battery manufacturing, embodied AI and other applications.

Features

- Gamma, Binning, Decimation, Sensor Bit Depth, Digital Shift, Black Level
- LUTs, User Set Control, Timer, Counter
- Color models support Light Source Preset, White Balance, Color Transformation Control and Saturation
- Support Remove Parameter Limit to expand the range of exposure, gain and so on
- 512KB data storage area for saving algorithm coefficients and parameter configuration

Specifications

Model	SIRS-206-201G2C-S \ SIRM-206-191U3C	SIRS-206-201G2M-S \ SIRM-206-191U3M
Resolution	1632(H) × 1264(V)	
Sensor	Global shutter CMOS	
Sensor Format	1/2.528"	
Pixel Size	3.45μm × 3.45μm	
Frame Rate	191fps	
ADC	8 bit, 12 bit	
Pixel Bit Depth	8 bit, 12 bit	
Mono/Color	Color	Mono
Pixel Formats	BayerBG8 / BayerBG12 / Mono8 / Mono12	Mono8 / Mono12
SNR	44.8 dB	44.15 dB
Exposure Time	Standard: 15μs~1s, Actual Steps: 1 row period	
Gain	Analog Gain: 0dB~23.8dB, Default: 0dB, Steps: 0.1dB Digital Gain: 0dB~24dB, Default: 0dB, Steps: 0.1dB	
Binning	FPGA: 1×1, 1×2, 1×4, 2×1, 2×2, 2×4, 4×1, 4×2, 4×4 Sensor: 1×1, 2×2	
Decimation	FPGA: 1×1, 1×2, 1×4, 2×1, 2×2, 2×4, 4×1, 4×2, 4×4	
Synchronization	Hardware trigger, software trigger	
Acquisition Mode	Single frame, Continuous, Software trigger, Hardware trigger	
Reverse X/Y	Reverse X/Y	
I/O Interface	1 input and 1 output with opto-isolated, 2 programmable GPIOs	
Data Interface	USB3.0	
Power Supply	SIRM: Power over USB3.0 interface SIRS: Connected to the SIRM unit via a coaxial cable, Power over Coax	
Typical Power	3.2W @ 5VDC (camera side: 0.76W)	
Operating Temp.	0°C ~ +45°C	
Storage Temp.	-20°C ~ +70°C	
Operating Humidity	10% ~ 80%	
Lens Mount	S	
Dimensions	SIRS: 20(W) × 20(H) × 19.35(L) mm (without lens adapter or connectors) SIRM: 29(W) × 29(H) × 31.05(L) mm (without connectors)	
Weight	SIRS: 14.5g, SIRM: 44g	
Software	3rd-party software such as HALCON, MERLIC and LabVIEW	
OS	32bit / 64bit Windows, Linux, Android, ARMv7, ARMv8	
Conformity	CE, RoHS, USB3 Vision®, GenICam®	

I/O Interface



Pin	Definition	Description
1	Line0+	Opto-isolated input +
2	GND	GPIO GND
3	Line0-	Opto-isolated input -
4	NC	NC
5	Line2	GPIO input/output
6	Line3	GPIO input/output
7	Line1-	Opto-isolated output -
8	Line1+	Opto-isolated output +

Spectral Response

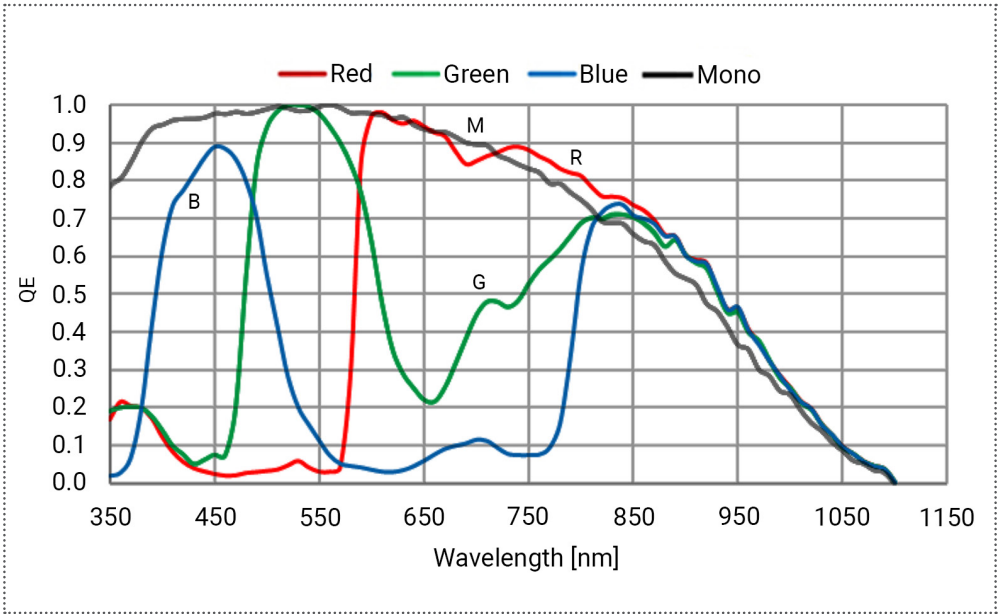

Technical Drawing

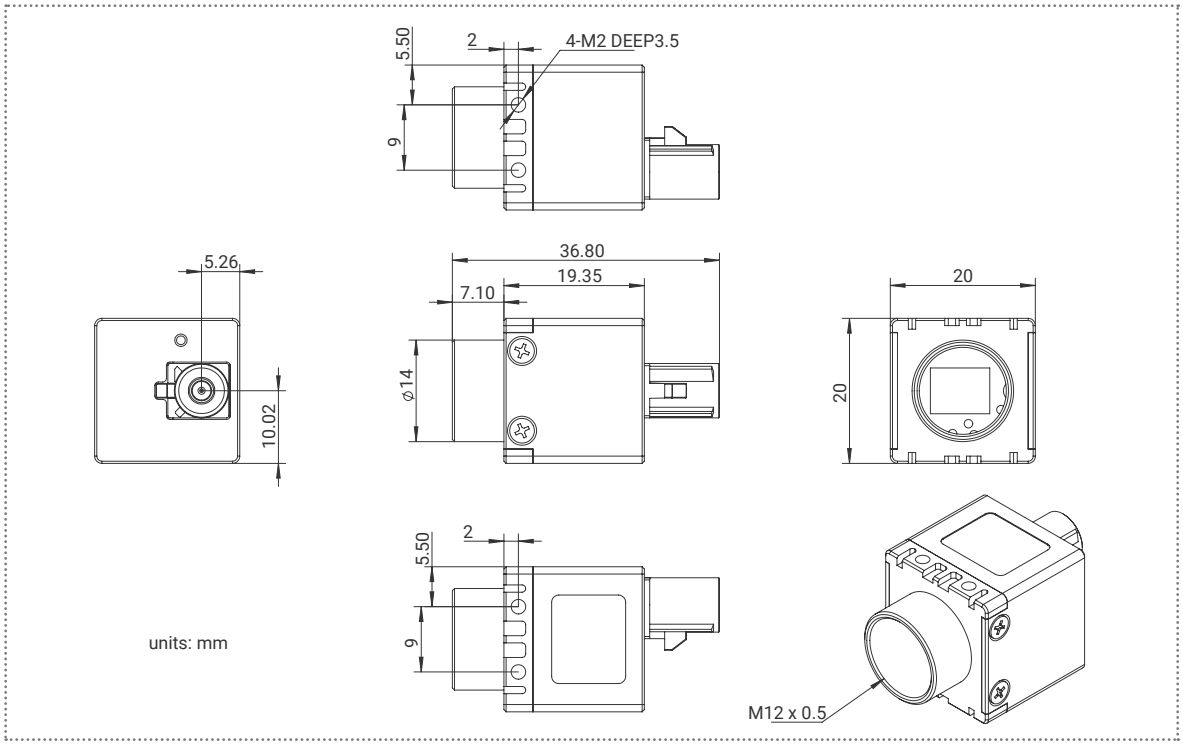

SIRS

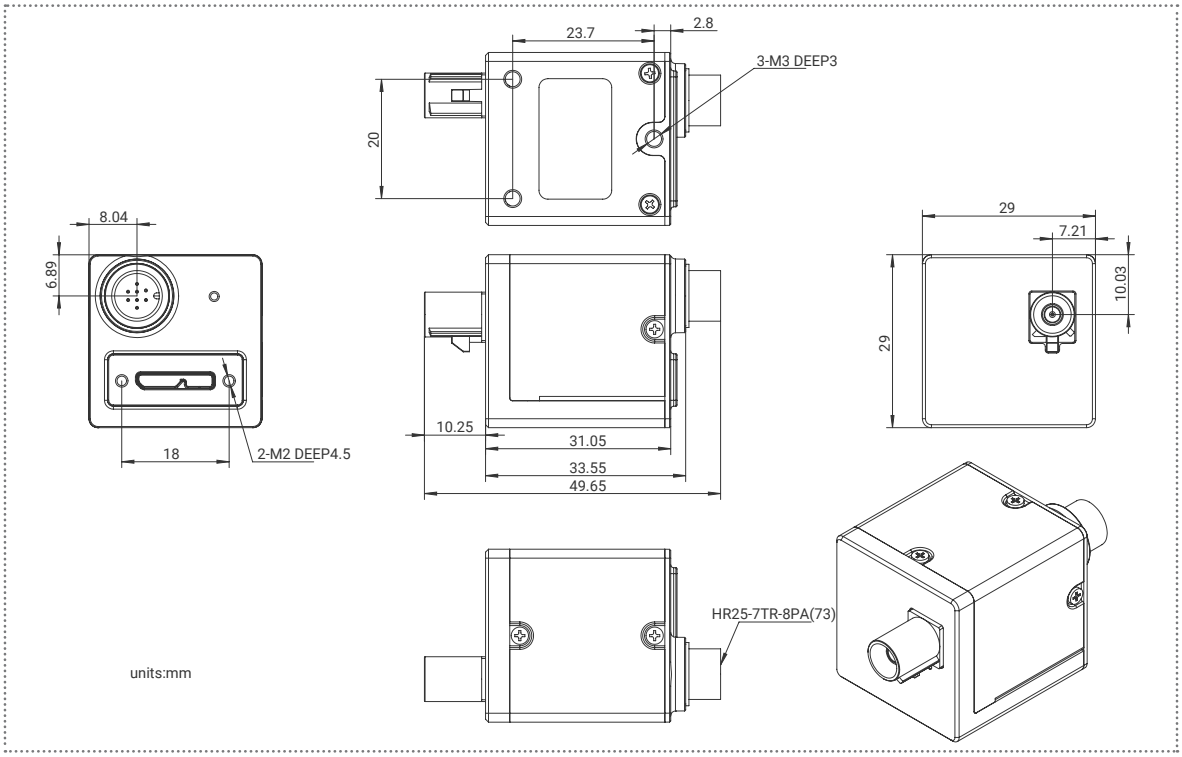

SIRM

China Daheng Group, Inc. Beijing Image Vision Technology Branch

12F Daheng Science & Technology Tower, No.3 Suzhou Street, Haidian District, Beijing China, 100080
Tel: +86 10 82828878
E-mail: isales@daheng-imaging.com

DAHENG IMAGING shall not be liable to damages resulting from errors, inconsistencies or omissions. Specifications are subject to change without prior notice.
Please refer to the manual for more details. Copyright © 2026 China Daheng Group, Inc. Beijing Image Vision Technology Branch. All rights reserved.