MER3-506-58G3M/C-P-AF

MERCURY3 Series 5MP CMOS 2.5GigE Area Scan Camera



The MER3-506-58G3M/C-P-AF camera is a monochrome/color GigE Vision camera with the Sony "Pregius S" CMOS sensor and high performance FPGA. The MER3-506-58G3M/C-P-AF camera is capable of 2.5Gbit/s maximum transfer data rate, and has opto-isolated I/Os that adapt to specific needs. Four-side mounting holes provide maximum installation flexibility for camera. Thanks to the extremely compact (29mm × 29mm), robust metal housings and locking screw connectors, the MERCURY3 cameras can secure the reliability of cameras deployed in harsh environments.

Applications

Suitable for machine vision applications such as industrial inspection, rail traffic, scientific research, 3D reconstruction and so on.

Features

- Support autofocus
- The Sequencer Control supports multiple sets of parameters configuration
- Exposure modes: Standard / UltraShort
- Decimation, Gamma, Digital Shift, Black Level and Burst Acquisition
- Timed exposure mode and TriggerWidth exposure mode
- Color models support Light source preset, Color Transformation Control and Saturation
- Timer, Counter, LUTs and User Set Control
- Support Remove Parameter Limit to expand the range of exposure, gain and so on
- 512K data storage area for saving algorithm coefficients and parameter configuration

Spectral Response

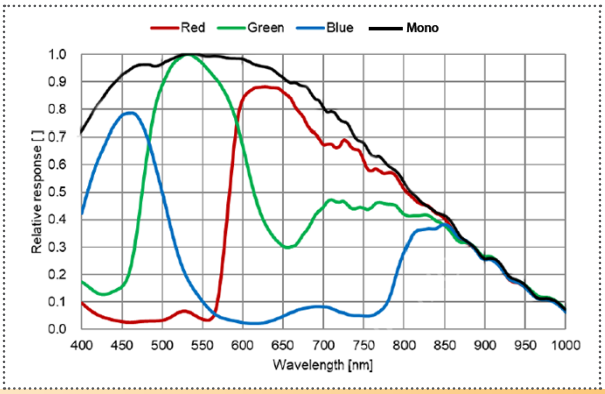

Specifications

Model	MER3-506-58G3C-P-AF	MER3-506-58G3M-P-AF
Resolution	2448(H) × 2048(V)	
Sensor	Sony IMX547 Global shutter CMOS	
Sensor Format	1/1.8"	
Pixel Size	2.74μm × 2.74μm	
Frame Rate	Default: 56.04fps, Max: 58.60fps, Acquisition burst high speed mode: 82.05fps	
ADC	12 bit	
Pixel Bit Depth	8 bit, 12 bit	
Mono/Color	Color	Mono
Pixel Formats	Bayer RG8 / Bayer RG12 / RGB8 / BGR8 / Mono8	Mono8 / Mono12
SNR	39.85 dB 39.82 dB	
Exposure Time	UltraShort: 1μs~2.4μs, Actual Steps: 0.1μs Standard: 3μs~20μs, Actual Steps: 1μs; 21μs~1s, Actual Steps: 1 row period	
Gain	0dB ~ 16dB, Default: 0dB, Steps: 0.1dB	
Binning	-	Sensor: 1×1, 2×2
Decimation	Sensor: 1×1, 2×2	
Synchronization	Hardware trigger, software trigger	
Acquisition Mode	Single frame, Continuous, Software trigger, Hardware trigger	
Reverse X/Y	Reverse X/Y	
I/O Interface	1 input with opto-isolated, 2 programmable GPIOs	
Data Interface	2.5GigE	
Power Supply	PoE (Power over Ethernet, IEEE802.3af compliant) or 12VDC-10% ~ 24VDC+10%	
Power Consumption	< 5.5 W @ 12V / PoE	
Operating Temp.	0°C ~ +50°C	
Storage Temp.	-20°C ~ +70°C	
Operating Humidity	10% ~ 80%	
Lens Mount	C	
Dimensions	29(W) × 29(H) × 50.6(L) mm (without lens adapter or connectors)	
Weight	69 g	
Software	3rd-party software such as HALCON, VisionPro and LabVIEW	
OS	32bit / 64bit Windows, Linux, Mac OS	
Conformity	CE, RoHS, FCC, ICES, UKCA, GigE Vision®, GenICam®	

I/O Interface

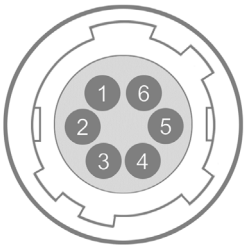

Pin	Definition	Description
1	POWER_IN	Camera external power, +12V DC~+24V DC
2	Line0+	Opto-isolated input +
3	RS232_TX	RS232 transmit
4	RS232_RX	RS232 receive
5	Line0-	Opto-isolated input -
6	GND	PWR GND & GPIO GND

Technical Drawing

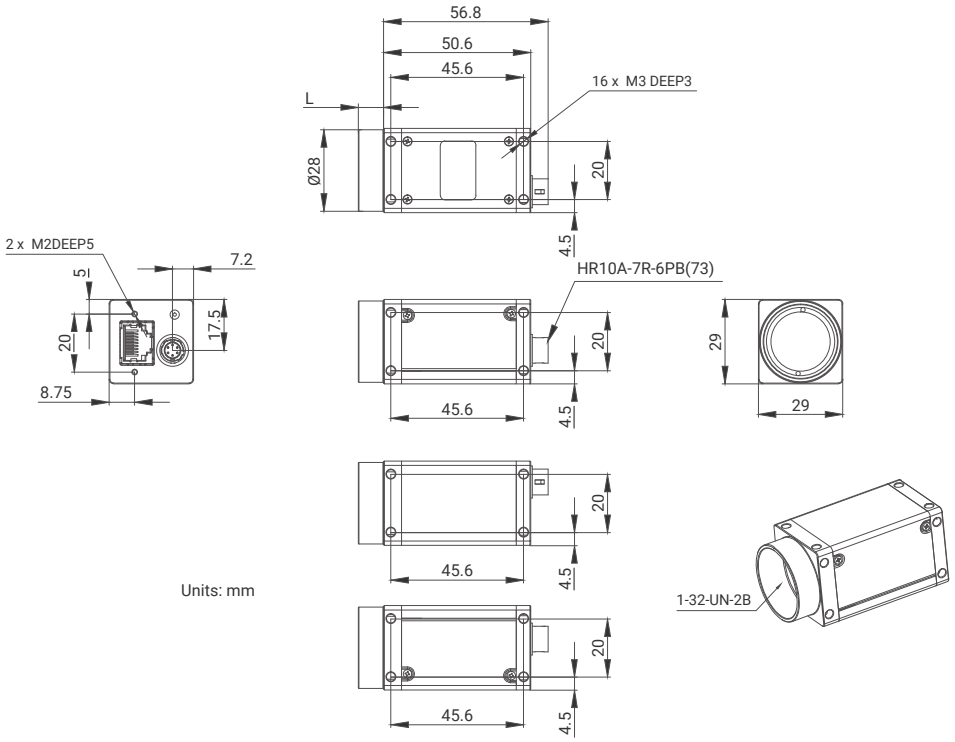

	MER3-506/800/1221/1610/2020/2440/2560	MER3-033/034/138/139/321/533/810/811
L	8.7	8.46

China Daheng Group, Inc. Beijing Image Vision Technology Branch

12F Daheng Science & Technology Tower, No.3 Suzhou Street, Haidian District, Beijing China, 100080

Tel: +86 10 82828878

E-mail: isales@daheng-imaging.com

DAHENG IMAGING shall not be liable to damages resulting from errors, inconsistencies or omissions. Specifications are subject to change without prior notice. Please refer to the manual for more details. Copyright © 2026 China Daheng Group, Inc. Beijing Image Vision Technology Branch. All rights reserved.